DALIA

Plafón-*Ceiling lamp*

8160 Blanco-*White*
LED 48W **3000K** 3360lm

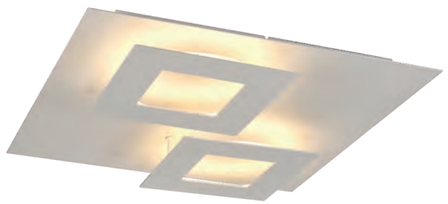

8161 Blanco+oro-*White+gold*
LED 48W **3000K** 3360lm

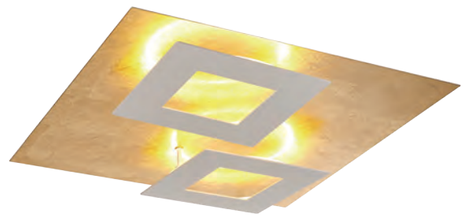

8162 Negro+oro-*Black+gold*
LED 48W **3000K** 3360lm

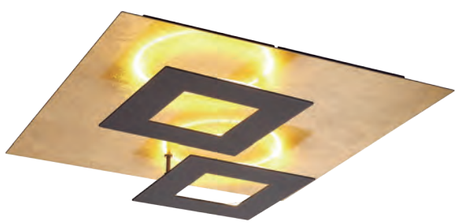

8163 Corten+oro-*Corten+gold*
LED 48W **3000K**3360lm

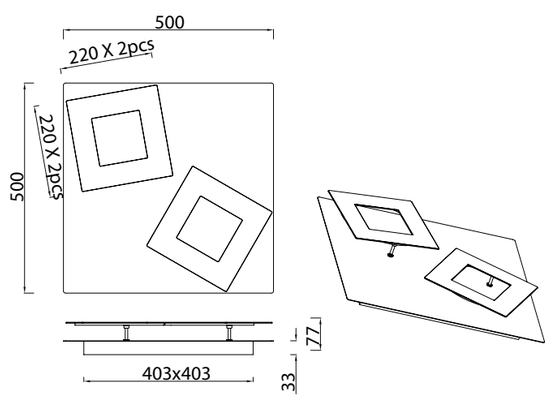

3000K

Aluminio/Aluminium 220-240V~ 50/60Hz CRI≥ 80

DALIA

Aplique-*Wall lamp*

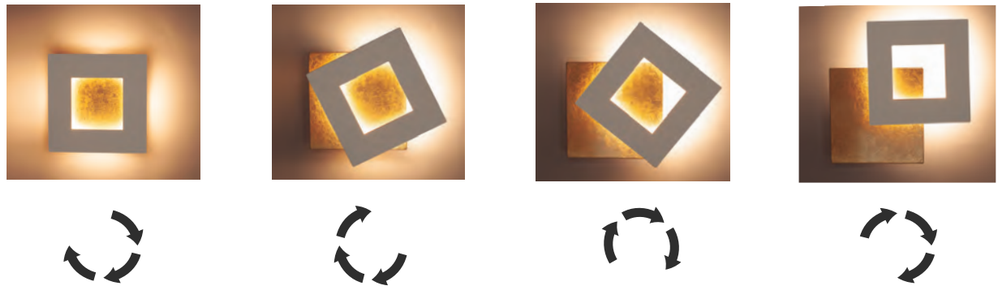

REFERENCE	K	LED WATT	LUMENS	FINISH	SIZES
8110	3000K	12W	840lm	Blanco-White	140 × 140
8111	3000K	12W	840lm	Blanco+oro-White+gold	140 × 140
8112	3000K	12W	840lm	Negro+oro-Black+gold	140 × 140
8113	3000K	12W	840lm	Corten+oro-Corten+gold	140 × 140
8114	3000K	18W	1260lm	Blanco-White	180 × 180
8115	3000K	18W	1260lm	Blanco+oro-White+gold	180 × 180
8116	3000K	18W	1260lm	Negro+oro-Black+gold	180 × 180
8117	3000K	18W	1260lm	Corten+oro-Corten+gold	180 × 180
8118	3000K	24W	1680lm	Blanco-White	220 × 220
8119	3000K	24W	1680lm	Blanco+oro-White+gold	220 × 220
8120	3000K	24W	1680lm	Negro+oro-Black+gold	220 × 220
8121	3000K	24W	1680lm	Corten+oro-Corten+gold	220 × 220
8143	3000K	40W	2800lm	Blanco-White	400 × 400
8144	3000K	40W	2800lm	Blanco+oro-White+gold	400 × 400
8145	3000K	40W	2800lm	Negro+oro-Black+gold	400 × 400
8146	3000K	40W	2800lm	Corten+oro-Corten+gold	400 × 400

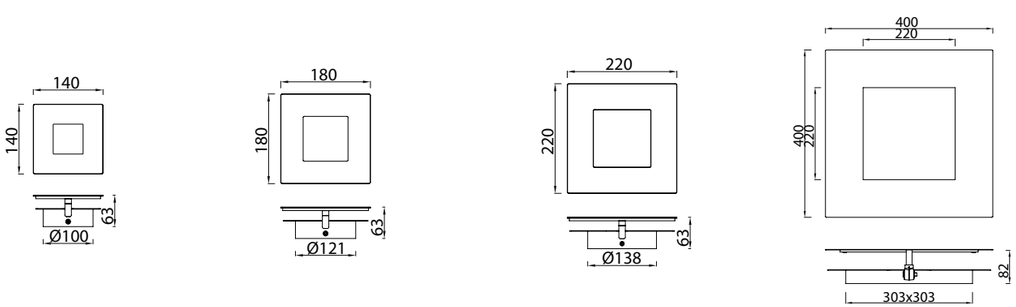

3000K IP20

Aluminio/Aluminium 220-240V~ 50/60Hz CRI≥ 80

Aplioque/*Wall lamp*

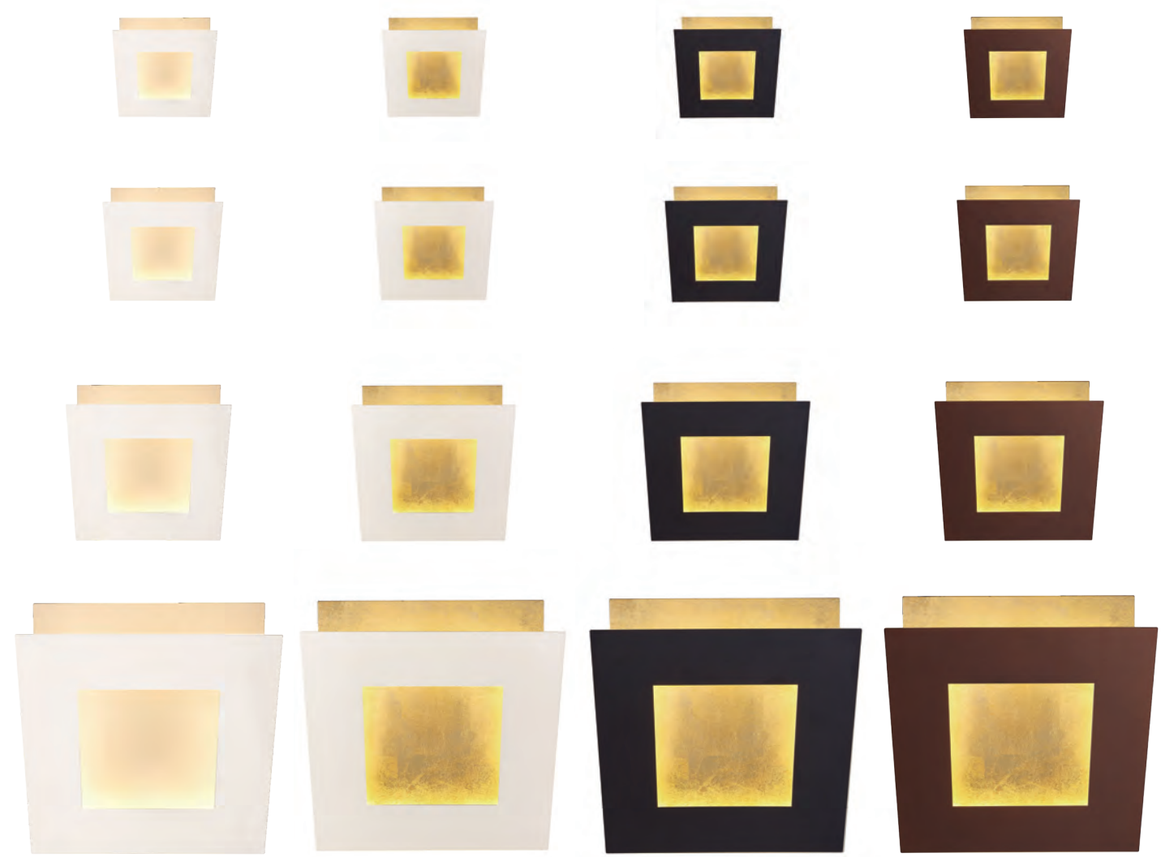

Blanco-White | Blanco+oro-White+gold | Negro+oro-Black+gold | Corten+oro-Corten+gold

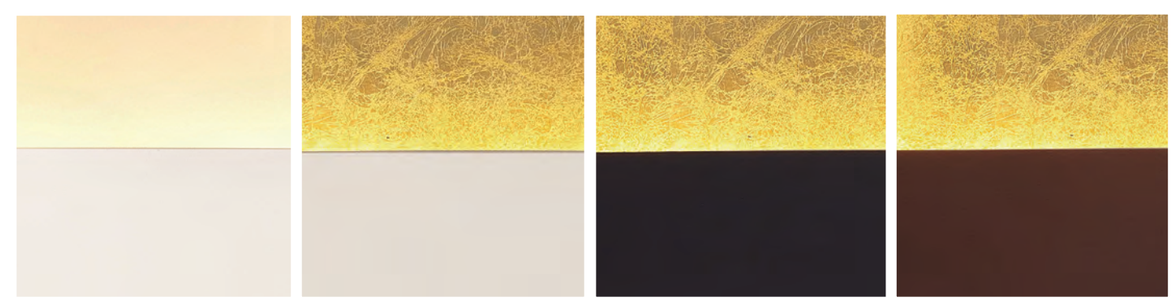

3000K IP20

Aluminio/Aluminium 220-240V~ 50/60Hz CRI≥ 80